Uses of limestone

Why is Limestone such a useful rock?

D: Identify some uses of Limestone

C: Describe how products can be made from limestone

B: Explain the reactions of Limestone

A: Analyse the impact of quarrying

A*: Link the reactions of limestone to the writing of word and symbol equations.

Starter:

List some uses of Limestone.....

Use the text book to help you if you need to

The Processing and Major Uses of Limestone

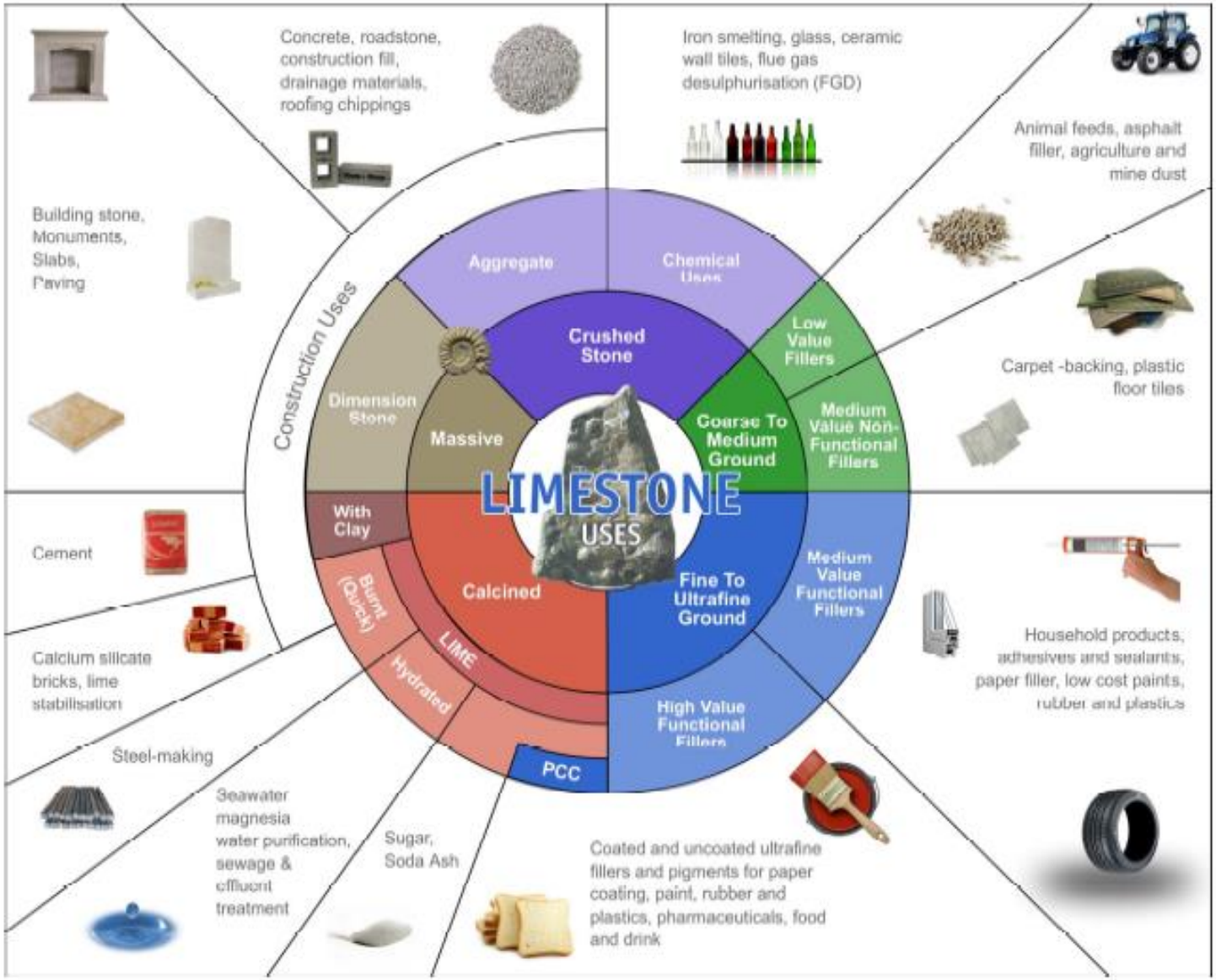

Limestone

- Limestone is a sedimentary rock.
- It comes from the shells of sea creatures or from solids formed in the oceans long ago.
- It is mostly made of calcium carbonate - $CaCO_3$.
- It is an important raw material for both the chemical and the construction industries.

Limestone as a base

Limestone is a base with the formula $CaCO_3$.

- It is capable of neutralising acids but because it is insoluble in water it does so without ever making the solution strongly alkaline.
- Carbonates fizz (effervesce) when they react with acids.

1	2	3	4	5	6	7	8	9	10	11	12	13	14

Neutralises acid - without the need for strong alkali

Limestone for stomachs!

Limestone is a base with the formula $CaCO_3$.

- During indigestion the stomach may produce too much (excess) acid.
- Indigestion tablets neutralise some of this acid.
- These tablets often contain purified calcium carbonate.

$$2HCl + CaCO_3 \Rightarrow CaCl_2 + H_2O + CO_2$$

Limestone for soil

Limestone is used in agriculture.

- Acidity can build up in soils.
- This can inhibit the growth of many crops. Consequently farmers need to adjust the pH back towards neutral.
- Limestone provides a cheap way of neutralising soil acidity.

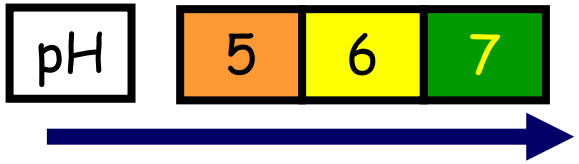

Quicklime - the lime kiln

- Limestone is heated in huge ovens known as lime kilns.
- The calcium carbonate decomposes into calcium oxide (quicklime) and carbon dioxide.
- Quicklime is a vital ingredient of cement, concrete and of most types of glass.

$$CaCO_3 \longrightarrow CaO + CO_2$$

Slaked lime

- If water is added to quicklime the calcium oxide changes into calcium hydroxide (slaked lime).
- Slaked lime is a vital ingredient of various building materials.

$$CaO + H_2O \Rightarrow Ca(OH)_2$$

- A solution of calcium hydroxide (limewater) is also used to test for carbon dioxide gas (it goes cloudy).

Manufacture of cement

- The main raw materials for cement are limestone and clay.
- To make concrete cement is mixed with small stones or gravel.

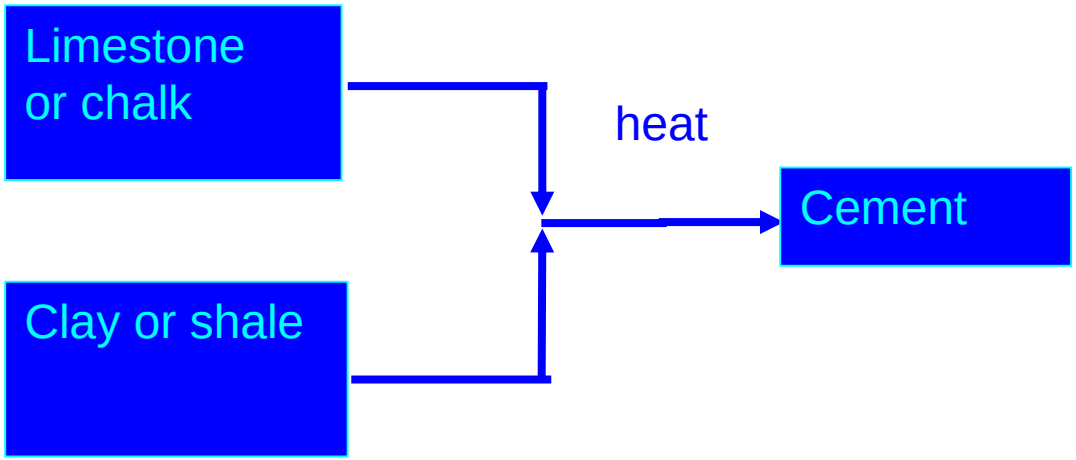

Manufacture of glass

Limestone, sand and sodium carbonate are the raw materials used to make most glass.

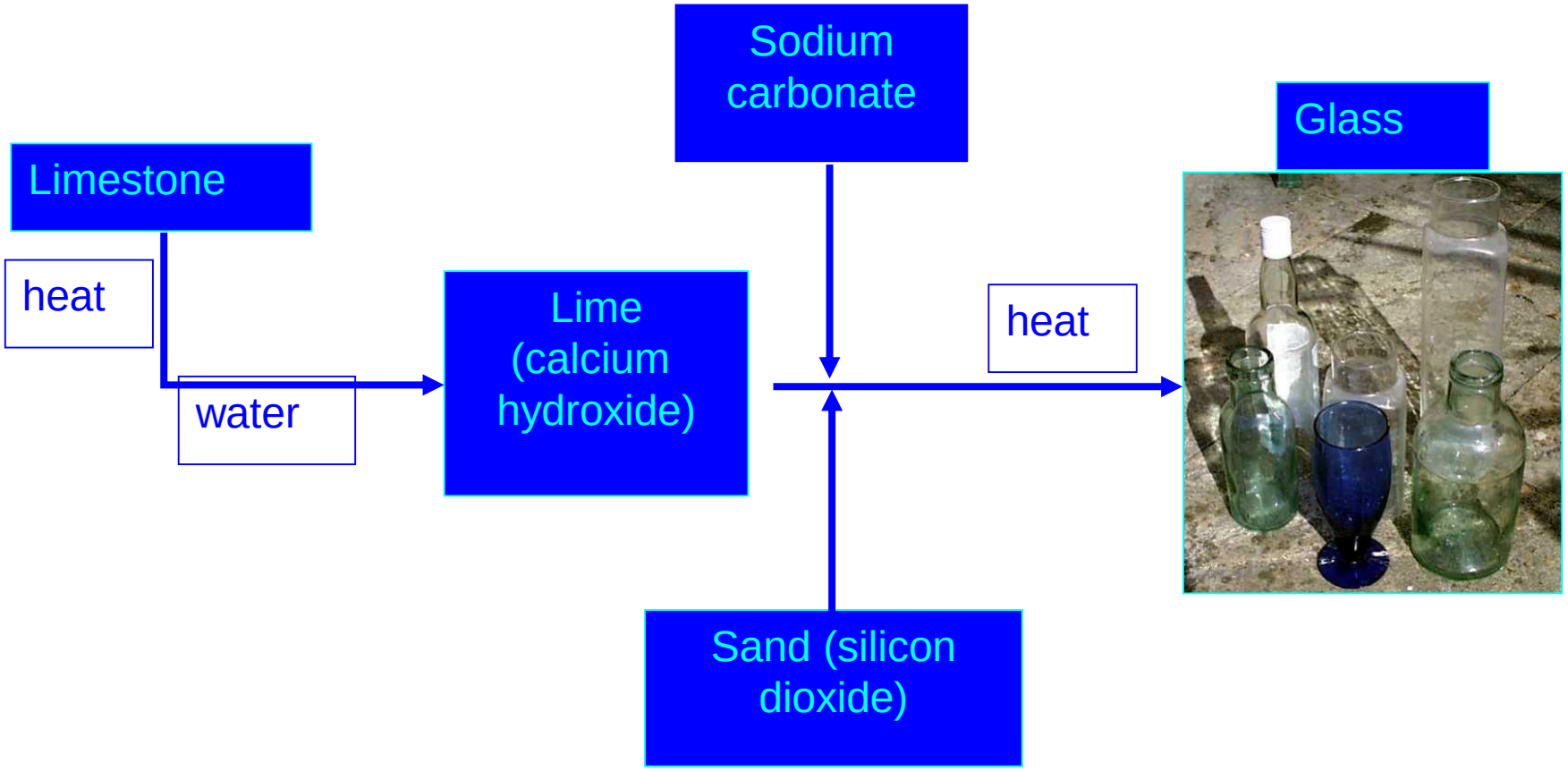

BINGO Chemistry

- Pupils choose 6 words from a list such as the one below and insert the words into their bingo card.

Limestone **thermal decomposition**

Toothpaste **Quicklime** **Heat**

Building materials **Lime kiln** **Rotates**

Calcium oxide **$CaCO_3$** **Carbon dioxide**
